Check Valve – Piston Type Series YCVS



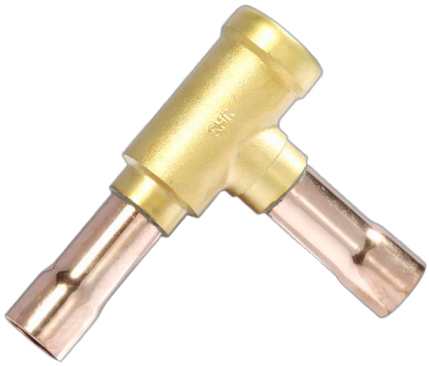

Piston type check valves are designed for installation in commercial refrigerating systems and in residential or industrial air conditioning plants. They are used to control the unidirectional flow of refrigerant to prevent backflow. A specific section of the present datasheet is related to the Check Valves models suitable for installation in system using flammable refrigerants HFO (categories A2* and A2L*), and Hydrocarbons HC (category A3*).
**According to ANSI-ASHRAE 34-2016 and EN-378-1 ANNEX EN 378-1:2016 Annex E*

Features

- This valve can ensure the only correct flow direction.
- Equipped with damping spring to freely install the valve at positions with pressure pulse.
- Available in 2 layouts depending by size: straightway valve and L-shape valve, easy to connect.
- Special version of check valve equipped with reinforced spring, applicable to compressor discharge pipes in single or multi compressor systems (YCVSH & YCVSH-R series)
- Low pressure drops during operation.
- Types with port size bigger 25mm having PED Cat.II by TUV Rheinland.

General Specification

- Applicable for all common HCFC and HFC refrigerants such as:
  R22, R134a, R404A, R407A/C/F, R410A, R507A, R448A, R449A, R450A, R452A, R513A
  R32, R1234yf, R1234ze, R454A/B/C, R455A
  R290, R1270, R600a, R744
- Ambient temperature range: from -30°C to +60°C
- Medium temperature TS min./max.: -50°C / 150°C
- Max. operating pressure PS: 4,9 MPa (49 bar)
- Installation position:
  - Flow direction corresponds to the arrow
  - The suggested positions are described in the installation instructions
- Declaration of Conformity issued in accordance with PED directive (2014/68/EU)
- Certifications: UL/CSA

Copyright © SANHUA 2025
Subject to change without notice

Section 1: Check Valves suitable for A1 refrigerants (Non-flammable refrigerants)

1a. Models with normal piston spring

General Characteristics											
Model	Product Number	Type	Connections Ø d ODF		Kv	Min. OPD	DN	PS	max TS	PED Cat. [F.G.1]	PED Cat. [F.G.2]
			[inch]	[mm]	[m³/h]	[kPa]	[mm]	[bar]	[°C]		
YCVS2H02	10162001502	S	-	6	0,56	5	5,0	49	150	Art. 4.3	Art. 4.3
YCVS2H01	10162001602	S	1/4	-	0,56	5	5,0	49	150	Art. 4.3	Art. 4.3
YCVS3H01	10162000402	S	3/8	-	1,60	5	7,9	49	150	Art. 4.3	Art. 4.3
YCVS3H02	10162000502	S	-	10	1,60	5	7,9	49	150	Art. 4.3	Art. 4.3
YCVS4H02	10162000802	S	-	12	2,64	5	11,1	49	150	Art. 4.3	Art. 4.3
YCVS4H01	10161001302	S	1/2	-	2,64	5	11,1	49	150	Art. 4.3	Art. 4.3
YCVS5H03	10161001602	S	5/8	16	4,00	5	13,0	49	150	Art. 4.3	Art. 4.3
YCVS6H04	10162003702	S	-	18	6,80	5	17,1	49	150	Art. 4.3	Art. 4.3
YCVS6H03	10161001702	S	3/4	-	6,80	5	17,1	49	150	Art. 4.3	Art. 4.3
YCVS7H03	10161001802	S	7/8	22	6,80	5	17,1	49	150	Art. 4.3	Art. 4.3
YCVS 20-77GSHC-1	10160030002	L	7/8	22	13,20	10	19,8	49	150	Art. 4.3	Art. 4.3
YCVS 26-88GSHC-1	10160037202	L	-	28	19,02	10	25,6	49	150	Cat. 2	Art. 4.3
YCVS 26-99GSHC-1	10160030102	L	1 1/8	-	19,02	10	25,6	49	150	Cat.2	Art. 4.3
YCVS 31-BBGSHC-1	10160024402	L	1 3/8	35	29,10	10	31,0	49	150	Cat.2	Art. 4.3
YCVS 31-DDGSHC-1	10160037002	L	1 5/8	-	29,10	10	31,0	49	150	Cat.2	Art. 4.3
YCVS 31-DDGSHC-2	10160032402	L	-	42	29,10	10	31,0	49	150	Cat.2	Art. 4.3

1b. Models with reinforced piston spring

General Characteristics											
Model	Product Number	Type	Connections Ø d ODF		Kv	Min. OPD	DN	PS	max TS	PED Cat. [F.G.1]	PED Cat. [F.G.2]
			[inch]	[mm]	[m³/h]	[kPa]	[mm]	[bar]	[°C]		
YCVSH3H01	10162000602	S	3/8	-	1,60	15	7,9	49	150	Art. 4.3	Art. 4.3
YCVSH3H02	10162000702	S	-	10	1,60	15	7,9	49	150	Art. 4.3	Art. 4.3
YCVSH4H02	10162001302	S	-	12	2,64	15	11,1	49	150	Art. 4.3	Art. 4.3
YCVSH4H01	10162001202	S	1/2	-	2,64	15	11,1	49	150	Art. 4.3	Art. 4.3
YCVSH5H03	10162001102	S	5/8	16	4,00	15	13,0	49	150	Art. 4.3	Art. 4.3
YCVSH6H04	10162003802	S	-	18	6,80	15	17,1	49	150	Art. 4.3	Art. 4.3
YCVSH6H03	10162001002	S	3/4	-	6,80	15	17,1	49	150	Art. 4.3	Art. 4.3
YCVSH7H03	10162000902	S	7/8	22	6,80	15	17,1	49	150	Art. 4.3	Art. 4.3
YCVSH 20-77GSHC-1	10160034602	L	7/8	22	13,20	30	19,8	49	150	Art. 4.3	Art. 4.3
YCVSH 26-88GSHC-1	10160023702	L	-	28	19,02	30	25,6	49	150	Cat.2	Art. 4.3
YCVSH 26-99GSHC-1	10160034702	L	1 1/8	-	19,02	30	25,6	49	150	Cat.2	Art. 4.3
YCVSH 31-BBGSHC-1	10160037402	L	1 3/8	35	29,10	30	31,0	49	150	Cat.2	Art. 4.3
YCVSH 31-DDGSHC-1	10160037102	L	1 5/8	-	29,10	30	31,0	49	150	Cat.2	Art. 4.3
YCVSH 31-DDGSHC-2	10160042302	L	-	42	29,10	30	31,0	49	150	Cat.2	Art. 4.3

Note: For the simulation of the performance, please refer to the Sanhua selection tool "Quickfinder" or ask your local support.

Copyright © SANHUA 2025
Subject to change without notice

Dimensions and Weights:

Models (table 1a)	Models (table 1b)	Type	Dimensions			Weight
			ØD	C	E	
			[mm]	[mm]	[mm]	[kg]
YCVS2H02	-	S	5	90	18	0,046
YCVS2H01	-	S	5	90	18	0,046
YCVS3H01	YCVSH3H01	S	8	110	17	0,046
YCVS3H02	YCVSH3H02	S	8	110	17	0,046
YCVS4H02	YCVSH4H02	S	10	130	21	0,069
YCVS4H01	YCVSH4H01	S	10	130	21	0,069
YCVS5H03	YCVSH5H03	S	13	140	23.5	0,107
YCVS6H04	YCVSH6H04	S	17	165	30	0,168
YCVS6H03	YCVSH6H03	S	17	165	30	0,169
YCVS7H03	YCVSH7H03	S	17	165	30	0,174
YCVS 20-77GSHC-1	YCVSH 20-77GSHC-1	L	20	132	87	0,427
YCVS 26-88GSHC-1	YCVSH 26-88GSHC-1	L	26	196	123	1,050
YCVS 26-99GSHC-1	YCVSH 26-99GSHC-1	L	26	196	123	1,132
YCVS 31-BBGSHC-1	YCVSH 31-BBGSHC-1	L	31	196	123	1,154
YCVS 31-DDGSHC-1	YCVSH 31-DDGSHC-1	L	31	196	123	1,182
YCVS 31-DDGSHC-2	YCVSH 31-DDGSHC-2	L	31	196	123	1,184

Straight-way

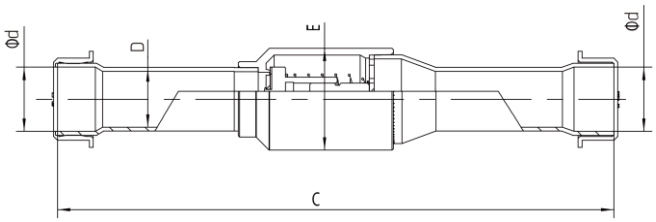

L-shape

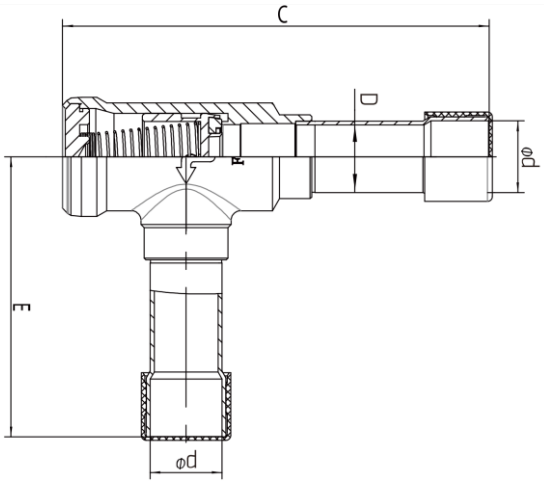

Copyright © SANHUA 2025
Subject to change without notice

YCVS5H03-RK

SANHUA

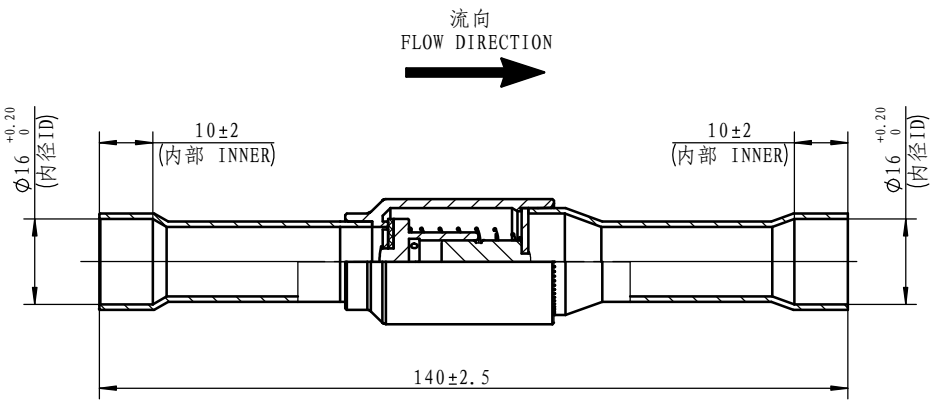

技术要求 TECHNICAL REQUIREMENT:

1、最大工作压力：4.9MPa；
Maximum working pressure: 4.9MPa;

2、耐压压力：7.35MPa；
Proof pressure: 7.35MPa;

3、适用于常见的HCFC, HFC, HC, HFO制冷剂，如 R32,R454B, R134a, R404A, R407A/F, R410A,R407C,R448A,R449A,R450A,R452A,R513A,R507A, R290
APPLICABLE FOR COMMON HCFC, HFC, HC, HFO REFRIGERANTS, SUCH AS: R32,R454B, R134a, R404A, R407A/F,R410A,R407C,R448A,R449A,R450A,R452A,R513A,R507A, R290

4、介质温度：-50℃～+140℃；
Medium temperature TS min./max.: -50℃/+140℃;

5、阀内泄漏：在逆向压力1.0MPa下，阀内泄漏量应在500ml/min(空气）以下。
under the reverse pressure of 1.0MPa, the internal leak≤500ml/min（air）;

6、最小开阀压差：0.005MPa。
The minimum opening valve differential pressure is 0.005MPa;

7、流量系数：Kv 4.0;
Flow coefficient: Kv 4.0;

8、耐久性：加油状态下，经△P=1.47MPa的压差，工作10万次后，气密性符合要求；内漏不大于750ml/min。
Durability: with oil, air tightness qualifies for requirement and internal leak≤750ml/min after test of 100,000 cycles of operation with pressure differential △P=1.47MPa.

注 NOTE:

1、当与主机或其它铜管焊接时，应使阀座温度保持在140℃以下。建议方法：用湿毛巾把阀体裹住。
WHEN THE VALVE IS INSTALLED IN BRAZING ON UNIT OR ANOTHER COPPER PIPE,THE VALVE SEAT TEMPERATURE SHALL BE 140℃ MAX.
PROPOSAL: CONTROL METHOD WIND AT DAMPED DUSTCLOTH.

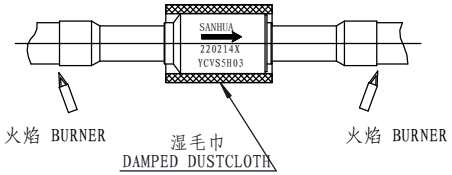

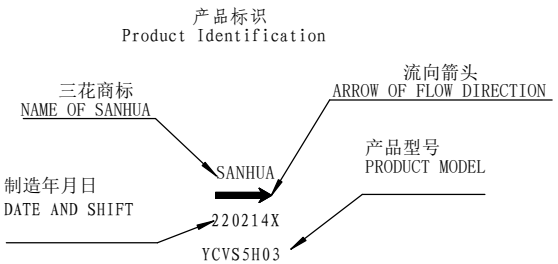

注意事项：NOTICE

1、此产品不可应用在喷气增焓回路中；
THIS PRODUCT CANNOT BE USED IN THE AIR-JET ENTHALPY LOOP;

2、产品安装，建议避免出口朝下安装，确保冷媒流向与产品箭头标识方向一致
PRODUCT INSTALLATION,IT IS RECOMMENDED TO AVOID THE INSTALLATION DIRECTION WITH THE OUTLET FACING DOWN,AND ENSURE THAT THE REFRIGERANT FLOW DIRECTION IS CONSISTENT WITH THE PRODUCT ARROW DIRECTION;

3、安装在压缩机附近的应用，需重点做好与产品连接的管路及固定设计，并做好振动应力确认。
FOR APPLICATIONS INSTALLED NEAR THE COMPRESSOR, FOCUS ON THE PIPING AND FIXED DESIGN CONNECTED TO THE PRODUCT, AND CONFIRM THE VIBRATION STRESS.

4、根据系统设计不同，需做阀件与系统的匹配，避免阀出现异音。
DESIGN ACCORDING TO DIFFERENT SYSTEM , NEED TO MATCH THE VALVE WITH SYSTEM, AVOID VALVE NOISE

注意：不得使水分进入阀内部
NOTICE: WATER (MOISTURE) SHALL BE NOT PUT IN THE VALVE INSIDE.

制造年月日记号及生产班组号 DATE AND SHIFT
例 example:
22 02 14 X
- 生产班组号(例A,B……) SHIFT(e.g.A,B...)
- 生产日 DAY
- 生产月 MONTH
- 生产年 YEAR

F		TG-22-184-2024	于卫旗	2024.8.26	
标记 Label	序号NO.	更改文件号Change document NO	签字 Signature	日期 Date	
设计 Designer		陈航	标准化 Standard	梁丽烂	
校对 Checker		吕晓峰	审定 Order	汪昌东	
审核 Verifier		俞利锋	(批准 Approval)		
工艺 Processor		余新林	日期 Date	2024-09-07	

单向阀
CHECK VALVE

YCVS5H03

YCVS5H03-RK

图样标记 Works	重量 Weight	比例 Ratio
B		1:1

共 1 张 Total 1　　第 1 张 Page 1

浙江三花商用制冷有限公司
Zhejiang SANHUA Commercial Refrigeration Controls Co.,Ltd

CHECK VALVE series

Applicable to fluids and refrigerants of GROUP 1 and 2 according to Directive 2014/68/EU

Product Range	Type	Temperature allowed range (TS):	Design Pressure (PS):
YCV	Float Type	-30°C to +100°C (-22°F to +212°F)* -30°C to +130°C (-22°F to +266°F)*	42,0 bar (609 psi)
YCVS	Piston Type	-50°C to +140°C (-58°F to +284°F)	46,0 bar (667 psi)
YCVS-R	Piston Type	-50°C to +150°C (-58°F to +302°F)	49,0 bar (710 psi)
BCV	Piston Type	-40°C to +150°C (-40°F to +302°F) -40°C to +150°C (-40°F to +302°F)	90 bar (1307 psi) 140 bar (2030 psi)

* Depending by the model size

1

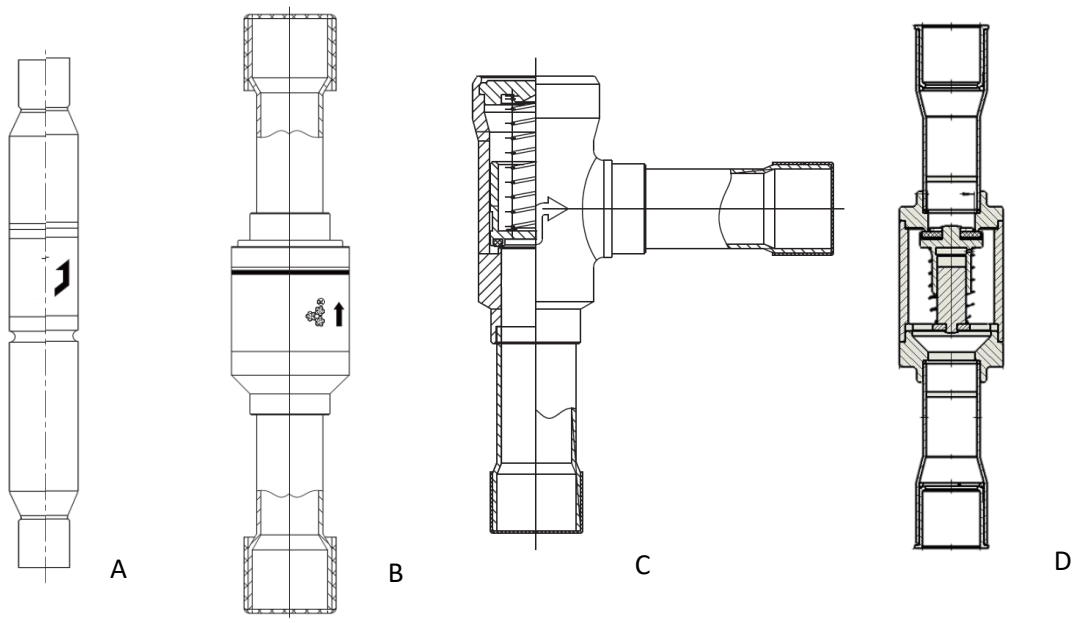

2

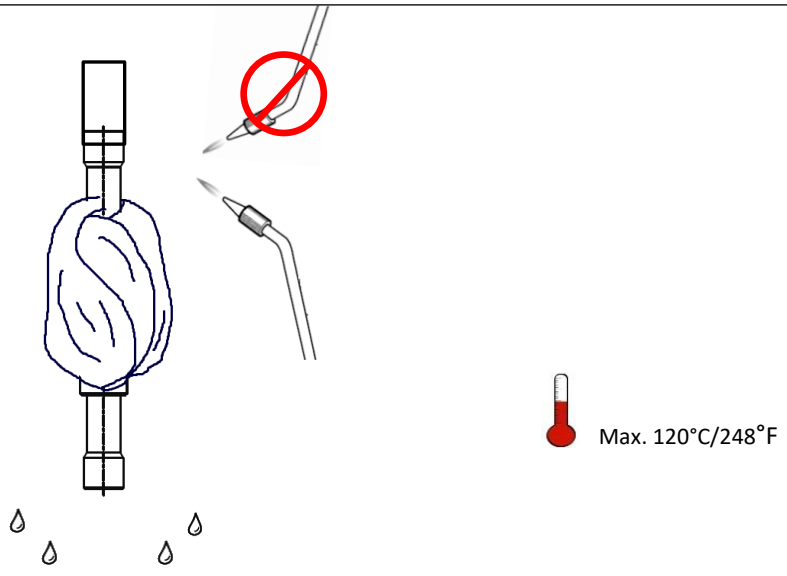

Copyright ©SANHUA 2020
Subject to change without notice

3

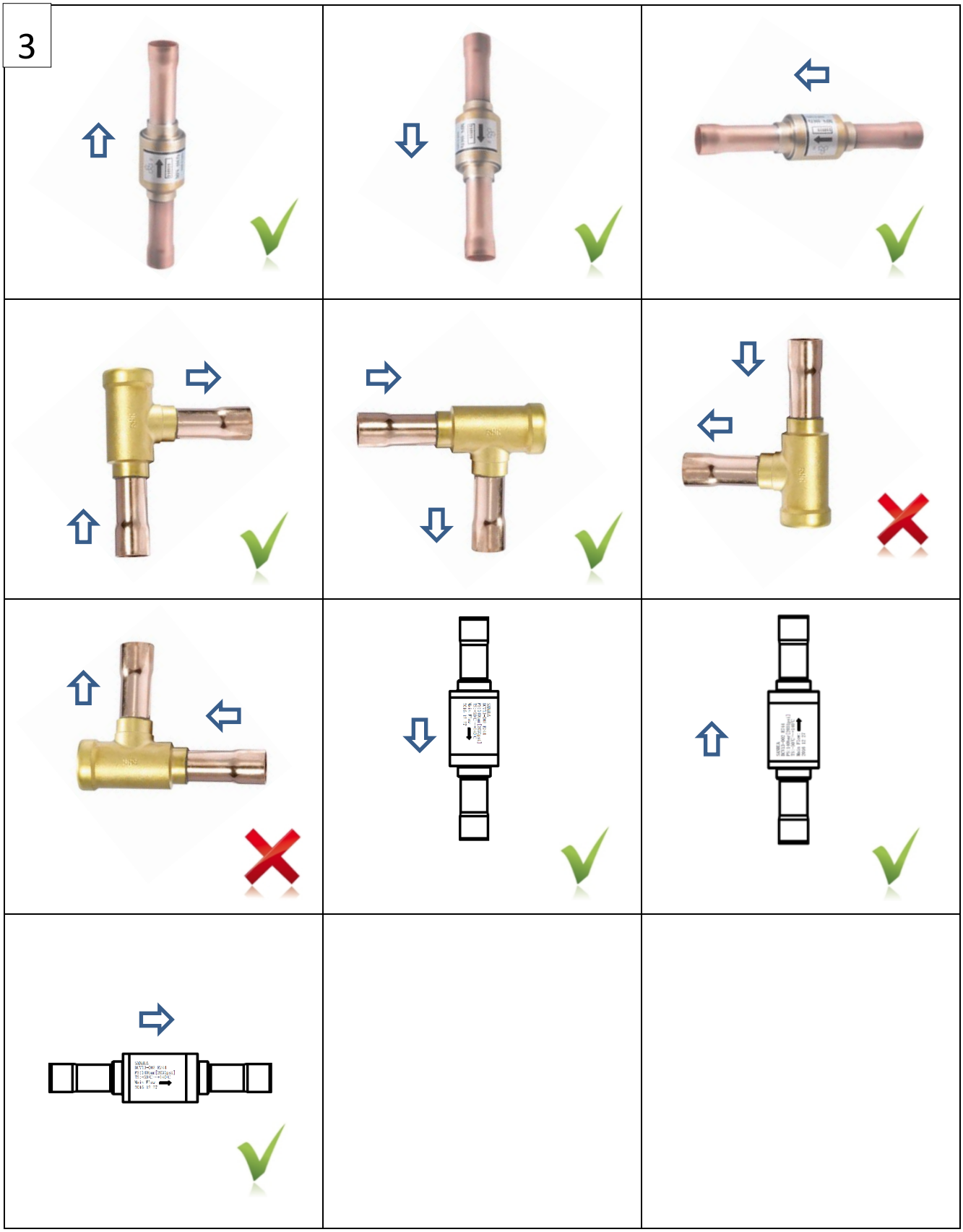

ACTION	English	Français	Deutsch	Italiano	Español	Русский	Chinese
1	Check valves can be installed in any section of a refrigerating system to avoid an inversion of the refrigerant flow.	Les clapets anti-retour peuvent être installés dans n'importe quelle partie d'un circuit frigorifique pour éviter une inversion de sens du flux réfrigérant.	Rückschlagventile können in jedem Bereich eines Kältesystems eingesetzt werden um einen Rückfluss des Kältemittels zu verhindern.	Le valvole di ritegno possono essere installate su tutti i rami di un impianto frigorifero per evitare l'inversione del senso di flusso.	Las válvulas de retención se pueden instalar en cualquier parte del sistema frigorífico para evitar el retorno del fluido.	Обратный клапан может быть установлен в любой точке холодильной системы для предотвращения обратного тока хладагента.	单向阀可以安装于系统中任何位置以防制冷剂反向流动
1a	Before connecting the valve to the pipe clean perfectly the refrigerating system	Nettoyer parfaitement le circuit frigorifique avant d'installer le clapet anti-retour	Vor der Montage des Ventils die Leitungen des Kältesytems korrekt reinigen.	Prima del montaggio della valvola sulla tubazione pulire accuratamente l'impianto frigorifero	Limpiar perfectamente el sistema frigorífico antes de montar las válvulas a las tuberias.	Перед монтажом клапана тщательно очистите холодильную систему.	在将阀连接到管路中前，先将系统清理干净
1b	Before connecting the valve to the pipe check that the flow direction in the pipe corresponds to the arrow stamped on the body of the valve.	Contrôler le sens d'installation du clapet à l'aide de la flèche sur son corps. Son sens doit correspondre au sens du flux frigorifique du circuit.	Vor der Montage des Ventils sicher stellen, dass die Strömungs-richtung mit der Pfeilrichtung auf dem Ventil-gehäuse übereinstimmt.	Prima del montaggio della valvola sulla tubazione controllare la corrispondenza tra il senso del flusso nella tubazione e il senso della freccia stampigliata sul corpo valvola	Antes del montaje verificar que la dirección del fluido en las tuberias coincide con el sentido de la flecha estampada sobre el cuerpo de la válvula	Перед монтажом клапана убедитесь что направление движения хладагента совпадает с указанным на корпусе клапана.	流体方向对应于阀体箭头所指方向
1c	The allowed operating positions are preferably with vertical axis and arrow upward (model B – Piston Type Series) and (model C – Angle Piston Type Series). Sloping axis, up to horizontal position, are tolerable. Model A – Float Type Series must be installed with flow direction from bottom to top.	Installer les clapets en position verticale et flèche dirigée vers le haut (modèle B type piston et modèle C Type Piston équerre). Ces clapets tolèrent une inclinaison jusqu'à l'horizontale. Les clapets de type à flotteur (Modèle A) doivent être quant à eux installés selon un flux vertical de bas vers le haut	Einbaulage vorzugsweise mit vertikaler Achse und Strömung aufwärts (Typ B– Piston Type Serie) und (Typ C – Angle Piston Type Serie). Abweichende Achsenwinkel bis zur horizontalen Lage können toleriert werden. Typ A – Float Typ Serie muss mit Strömungs-richtung aufwärts montiert werden.	Le posizioni di funzionamento consentite sono preferibilmente con asse tubazione verticale e freccia rivolta verso l'alto (modello B – Piston Type Series) e (modello C - Angle Piston Type Series). Sono tollerati montaggi con asse tubazione inclinato sino ad arrivare all'asse orizzontale. Il modello A - Float Piston Type Series deve essere installato con il senso del flusso dal basso verso l'alto.	La posición de funcionamiento aconsejada es preferentemente con el eje vertical y la flecha hacia arriba, para los Modelos B- (Serie Tipo Pistón), y los Modelos C- (Serie Tipo Pistón, en Angulo). Para estos modelos, se aceptan los montajes en tuberias con eje inclinado llegando hasta eje horizontal. Para los Modelos A- (Serie tipo Flotante), el montaje debe ser con la dirección de flujo de abajo hacia arriba.	Рекомендуется установка клапана в вертикальном положении стрелкой вверх (для моделей B – поршневого типа прямых и моделей C – поршневого типа угловых). Установка под наклоном (вплоть до горизонтальной) также допускается. Модель A (поплавкового типа) должна быть установлена с направлением движения хладагента снизу вверх.	推荐工作位置垂直轴线和箭头朝上（型号 B-活塞式）（型号 C-直角活塞式）倾斜轴线一直到水平位置亦可 型号 A-浮子式安装时流体必须从下到上
2	Braze the check valve using specific alloy (SilFos 15). Use a wet rag on check valve during the brazing process	Braser les tubes de connection en utilisant un alliage spécifique (type SilFos 15). Placer un chiffon mouillé sur le corps du clapet pendant le brasage.	Einlöten des Ventils unter Verwendung spezieller Legierung (SilFos 15). Während des Lötvorgangs das Ventil in offen Position mit nassem Lappen umwickeln.	Brasare la valvola di ritegno usando una lega specifica (SilFos 15). Usare uno straccio bagnato sulla valvola di ritegno durante il processo di brasatura.	Soldar la válvula de retención usando una aleación específica (SilFos 15). Poner un paño húmedo sobre la válvula durante el proceso de soldadura.	При пайке пользуйтесь припоем (SilFos15). Защитите обратный клапан от перегрева мокрой ветошью.	使用特殊合金 (推荐 SilFos 15)进行焊接，焊接过程使用湿布保护
3	Piston Type Series Suggested mounting positions	Série à piston Positions de montage suggérées	Kolbentyp-Serie Empfohlene Einbaulage	Serie a Pistone: Posizioni di montaggio suggerite	Serie de tipo de pistón Posiciones de montaje sugeridas	Серия поршневых типов Предлагаемые монтажные позиции	活塞式系列 建议的安装位置

Copyright ©SANHUA 2020
Subject to change without notice

Copyright ©SANHUA 2020
Subject to change without notice